Catalogue - PROTECTIVE DEVICES - Edition 2015

KEKOVARICON

Varistors

SMD, THD, High Energy

Varicons

Multilayer SMD and THD

Dual Function Varicons

Capacitors

Safety class X and Y disc capacitors

High voltage disc capacitors

www.keko-varicon.si

OVERVIEW OF PROTECTIVE DEVICES

Maximum Steady State Applied Voltage (Vrms)

2 | 11 | 14 | 40 | 60 | 95 | 250 | 300 | 440 | 550 | 680

Basic Electrical Parameters		Size (mm)	Package
Imax = 13000 to 80000 A, Wmax = 90 to 4140 J Imax > 5500 A/cm², Wmax > 400 J/cm³	**ZOV Series** **Square Shaped** **High Energy Varistors**	23, 25, 32, 40, 60	
Imax = 15000 to 40000 A, Wmax = 30 to 2590 J	**ZOVR Series** **Round Shaped** **High Energy Varistors**	25, 32, 40	
Imax (8/20µs) up to 150 kA, Iimp (10/350µs) up to 25 kA Custom Design	**ZOVH / ZOVS Series** **High Energy Varistors** **for class I applications**	40, 40 D2, 40 D4 (80,120)	
Imax = 600 to 15000 A, Wmax = 4 to 815 J Imax > 5500 A/cm², Wmax > 400 J/cm³	**SV Series** **Special Medium** **Voltage Varistors**	5, 7, 10, 14, 20, 23	
Imax = 1750 to 15000 A, Wmax = 9 to 627 J	**CV+ Series** **Medium Voltage** Varistors	7,10, 14, 20, 23	
Imax = 400 to 6500 A, Wmax = 2,7 to 620 J	**CV Series** **Medium Voltage** Varistors	5, 7, 10, 14, 20	
KM – C = 10 to 15 nF, Class X1, 300 VAC KM – C = 1 to 10 nF, Class Y2, 300 VAC KZL, KZH – C = 330 to 4700 pF, Class X1/Y1/Y2, 300/500 VAC	**KM Series** **RFI Suppression Ceramic Capacitors** **KZ Series** **Safety Ceramic Capacitors**	330 pF to 10 nF	
C = 300pF to 10nF Vr = 1kV to 6kV	**KV Series** **High Voltage Disc** **Cermic Capacitors**	330 pF to 10 nF	
Imax = 100 to 1200 A, Wmax = 0,6 to 30 J	**PV Series** **Low & Medium** **Voltage Varistors**	3225 4032	
Imax = 100 to 1200 A, Wmax = 0,6 to 30 J	**DV Series** **Medium Voltage** Varicons	2220 3225 4032	
Imax = 1500 A, Wmax = 0,1 to 2,6 J C (@ 1kHz) = 10 nF to 1000 nF	**MV Series** **Low Voltage Dual Function Varicons**	5	1210
Imax = 20 to 2000 A, Wmax = 0,1 to 37,8 J	**ZV Series** **Low Voltage Varicons**	5, 7, 10, 14, 20	0603, 0805, 1206, 1210, 1812, 2220
Imax = 30 to 40 A Wmax = 1,0 J	**ZVX Series** **Low Capacitance & Low Energy** Varicons	0603, 0805, 1206	
tr < 1 ns, Wmax = 0,05 to 0,1 J	**ZVE Series** **ESD Suppression** Varicons	0603, 0805, 1206, 1210	
CL and C Series : C = 1pF to 4,7µF, V = from 16 V to 630 V X7R, C series: AgPd, Barrier End Terminations, Ni / Sn End terminations	**CL Series** **Through-Hole MLC Capacitor** C Series **SMD MLC Capacitor**	5, 6, 8, 9	0603, 0805, 1206, 1210, 1812, 2220
Imax = 800 to 1200 A, WLD = 6 to 12 J C (@ 1kHz) = 470 nF to 1500 nF Custom Design	**OV Series** Automotive **Dual Function** Varicons	8, 9	1812, 2220
Imax = 120 to 2000 A, WLD = 3 to 100 J Custom Design	**AV Series** Automotive Varicons	6, 8, 8, 11	0805, 1206, 1210, 1812, 2220, 3225

3 | 14 | 18 | 56 | 85 | 125 | 385 | 745 | 895

Maximum Steady State Applied DC Voltage (Vdc)

KEKO VARICON products are sold by description only - product technical specification. KEKO VARICON reserves the right to make changes in circuit design and/or specifications at any time without notice. Accordingly the reader is cautioned to verify that data sheets are current before placing orders. Information furnished by KEKO VARICON is believed to be accurate and reliable. However, no responsibility is assumed by KEKO VARICON for its use; nor for any infringements of patents or other rights of third parties which may result from its use.

APPLICATION FIELDS

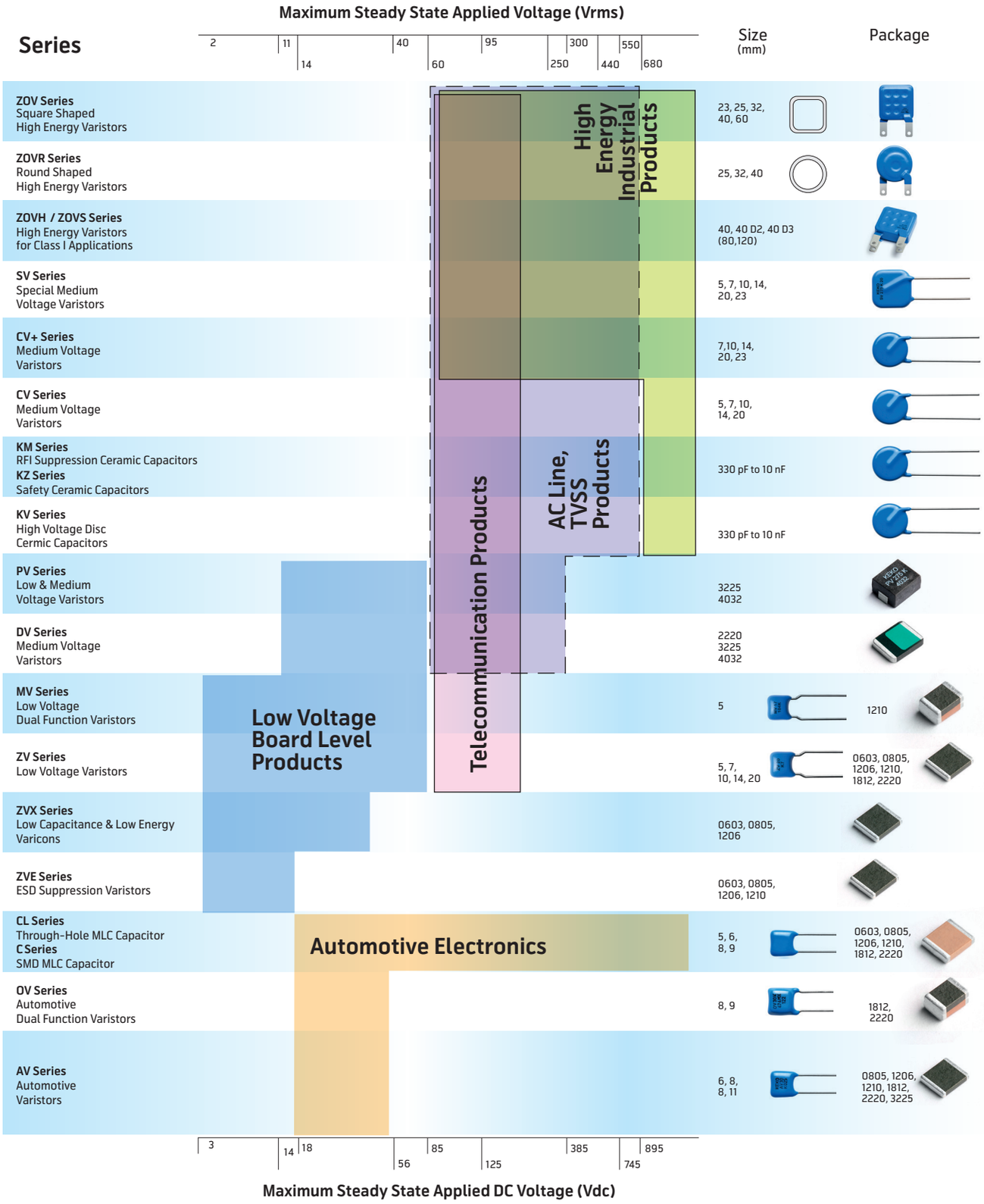

KEKO VARICON products are sold by description only - product technical specification. KEKO VARICON reserves the right to make changes in circuit design and/or specifications at any time without notice. Accordingly the reader is cautioned to verify that data sheets are current before placing orders. Information furnished by KEKO VARICON is believed to be accurate and reliable. However, no responsibility is assumed by KEKO VARICON for its use; nor for any infringements of patents or other rights of third parties which may result from its use.

SPECIAL MEDIUM VOLTAGE VARISTORS – SV SERIES

Description

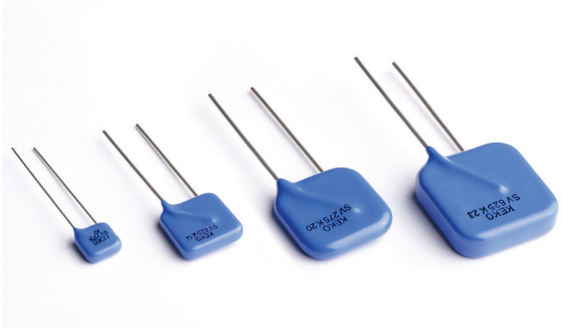

The SV series is a series of lead style epoxy coated square or rectangular shaped varistors with an AC operating voltage ranging from 60 V to 550 V. There are two groups of these varistors.

The first consists of square shaped varistors with extremely high current and energy capabilities and a low clamping voltage, providing an increased level of protection necessary for the transients expected in telecommunication and AC power networks. Compared to electrically equivalent disc varistors, SV varistors come in smaller nominal dimensions.

With the second SV series group, the customer is offered the opportunity to design their own optimum varistor to suit their specific application, within the dimensions that are possible. Parameters free to be chosen are: non-standard DC/AC operating voltage, leakage current, clamping voltage, maximum surge current, energy absorption level, maximum dissipation power as well as shape, the dimensions being the function of required electrical parameters and vice-versa.

Features

- Operating voltage range V_{rms} ..... 60 V to 550 V.
- Operating voltage range V_{dc} ..... 85 V to 745 V.
- 6 model sizes equivalent to standard disc varistors: 5 mm, 7 mm, 10 mm, 14 mm, 20 mm, 23 mm.
- Smaller nominal dimensions.
- Broad range of current and energy handling capabilities.
- +85 °C continuous operating temperature.
- Low clamping voltage.
- Available with straight and crimped leads.
- Available in tape and reel for automatic pick and place.
- c UL us UL 1449, 3rd edition & CSA C22.2. File E326499 Section 4.
- Lead free components.

Full Custom Parameter Designed Varistors

- Operating voltage range V_{rms} ..... 60 V to 1000 V.
- Operating voltage range V_{dc} ..... 85 V to 1300 V.
- Indefinite number of sizes of both square and rectangular shape, the maximum being 23 x 23 mm.
- Broad range of current and energy handling capabilities.
- +125 °C continuous operating temperature.
- Electrical parameters free to be chosen are AC/DC operating voltage, leakage current, clamping voltage, maximum surge current, energy absorption level, maximum dissipation power and threshold voltage temperature coefficient.
- Available in tape and reel for automatic pick and place.
- SV...K 20 with I_{max} = 1 x 15 kA @ 8/20 µs is available upon request.
- SV...K 23 with I_{max} = 1x 20 kA @ 8/20 µs is available upon request.

Absolute Maximum Ratings

Continuous:	**Standard Types**	Units	**Custom Designed Types**	Units
Steady State Applied Voltage:				
DC Voltage Range (V_{dc})	85 to 745	V	85 to 1300	V
AC Voltage Range (V_{rms})	60 to 550	V	60 to 1000	V
Transient:				
Peak Single Pulse Surge Current, 8/20 µs Waveform, (I_{max})	600 to 15.000	A	>5500	A/cm²
Single Pulse Surge Energy, 10/1000 µs Waveform (W_{max})	4 to 815	J	>400	J/cm²
Operating Ambient Temperature	-40 to +85	°C	-40 to +125	°C
Storage Temperature Range	-40 to +125	°C	-40 to +125	°C
Threshold Voltage Temperature Coefficient	< +0,05	%/°C	< +0,05	%/°C
Insulation Resistance	> 1	GΩ	> 1	GΩ
Isolation Voltage Capability	> 2,5	kV	> 2,5	kV
Response Time	< 25	ns	< 2,5	µs
Climatic Category	40 / 85 / 56		40 / 125 / 56	

* valid in case of epoxy coated components

KEKO VARICON products are sold by description only - product technical specification. KEKO VARICON reserves the right to make changes in circuit design and/or specifications at any time without notice. Accordingly the reader is cautioned to verify that data sheets are current before placing orders. Information furnished by KEKO VARICON is believed to be accurate and reliable. However, no responsibility is assumed by KEKO VARICON for its use; nor for any infringements of patents or other rights of third parties which may result from its use.

Device Ratings and Characteristics

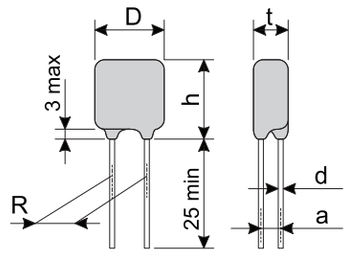

SV 60 K 5.....SV 230 K 23

Type	V_{rms}	V_{dc}	V_n @ 1 mA	V_c	I_c	W_{max} 10/1000 µs	P max	Imax* 8/20 µs	C typ. @ 1 kHz	D max	t max	R	d	h max
	V	V	V	V	A	J	W	A	pF	mm	mm	mm	mm	mm
SV 60 K 5	60	85	100	155v	5	4	0,1	600	370	7	2,5	5	0,6	9,5
SV 60 K 7	60	85	100	155	10	9	0,25	1750	900	9	3,5	5	0,6	11,5
SV 60 K 10	60	85	100	155	25	20	0,4	3500	1380	12	4,1	7,5	0,8	15
SV 60 K 14	60	85	100	155	50	42	0,6	8000	2300	16	4,2	7,5	0,8	19
SV 60 K 20	60	85	100	155	100	89	1	12000	3400	22,5	4,5	10	0,8	26
SV 75 K 5	75	100	120	190	5	5	0,1	600	300	7	3,6	5	0,6	9,5
SV 75 K 7	75	100	120	190	10	11	0,25	1750	720	9	3,6	5	0,6	11,5
SV 75 K 10	75	100	120	190	25	26	0,4	3500	1080	12	4,2	7,5	0,8	15
SV 75 K 14	75	100	120	190	50	51	0,6	8000	1850	16	4,2	7,5	0,8	19
SV 75 K 20	75	100	120	190	100	101	1	12000	3100	22,5	4,6	10	0,8	26
SV 95 K 5	95	125	150	240	5	7	0,1	600	240	7	3,8	5	0,6	9,5
SV 95 K 7	95	125	150	240	10	14	0,25	1750	580	9	3,8	5	0,6	11,5
SV 95 K 10	95	125	150	240	25	31	0,4	3500	870	12	4,3	7,5	0,8	15
SV 95 K 14	95	125	150	240	50	64	0,6	8000	1480	16	4,3	7,5	0,8	19
SV 95 K 20	95	125	150	240	100	133	1	12000	2700	22,5	4,6	10	0,8	26
SV 115 K 5	115	150	180	290	5	8	0,1	600	200	7	4,0	5	0,6	9,5
SV 115 K 7	115	150	180	290	10	16	0,25	1750	480	9	4,0	5	0,6	11,5
SV 115 K 10	115	150	180	290	25	37	0,4	3500	750	12	4,3	7,5	0,8	15
SV 115 K 14	115	150	180	290	50	78	0,6	8000	1230	16	4,4	7,5	0,8	19
SV 115 K 20	115	150	180	290	100	147	1	12000	2200	22,5	4,8	10	0,8	26
SV 130 K 5	130	170	205	320	5	9	0,1	600	180	7	4,0	5	0,6	9,5
SV 130 K 7	130	170	205	320	10	19	0,25	1750	430	9	4,0	5	0,6	11,5
SV 130 K 10	130	170	205	320	25	42	0,4	3500	670	12	4,5	7,5	0,8	15
SV 130 K 14	130	170	205	320	50	85	0,6	8000	1100	16	4,6	7,5	0,8	19
SV 130 K 20	130	170	205	320	100	177	1	12000	2150	22,5	5,0	10	1	26
SV 130 K 23	130	170	205	320	100	222	1	15000	3390	25	5,0	10	1	27
SV 140 K 5	140	180	220	340	5	9	0,1	600	170	7	4,1	5	0,6	9,5
SV 140 K 7	140	180	220	340	10	22	0,25	1750	400	9	4,1	5	0,6	11,5
SV 140 K 10	140	180	220	340	25	46	0,4	3500	620	12	4,6	7,5	0,8	15
SV 140 K 14	140	180	220	340	50	94	0,6	8000	1020	16	4,7	7,5	0,8	19
SV 140 K 20	140	180	220	340	100	196	1	12000	1900	22,5	5,4	10	1	26
SV 140 K 23	140	180	220	340	100	247	1	15000	3340	25	5,4	10	1	27
SV 150 K 5	150	200	240	360	5	11	0,1	600	160	7	4,3	5	0,6	9,5
SV 150 K 7	150	200	240	360	10	23	0,25	1750	380	9	4,3	5	0,6	11,5
SV 150 K 10	150	200	240	360	25	51	0,4	3500	590	12	4,8	7,5	0,8	15
SV 150 K 14	150	200	240	360	50	101	0,6	8000	690	16	4,8	7,5	0,8	19
SV 150 K 20	150	200	240	360	100	213	1	12000	1740	22,5	5,6	10	1	26
SV 150 K 23	150	200	240	360	100	270	1	15000	3050	25	5,6	10	1	27
SV 175 K 5	175	225	270	420	5	11	0,1	600	140	7	4,8	5	0,6	9,5
SV 175 K 7	175	225	270	420	10	26	0,25	1750	330	9	4,8	5	0,6	11,5
SV 175 K 10	175	225	270	420	25	58	0,4	3500	500	12	5,0	7,5	0,8	15
SV 175 K 14	175	225	270	420	50	119	0,6	8000	830	16	5,0	7,5	0,8	19
SV 175 K 20	175	225	270	420	100	241	1	12000	1630	22,5	5,8	10	1	26
SV 175 K 23	175	225	270	420	100	305	1	15000	2870	25	5,8	10	1	27
SV 230 K 5	230	300	360	550	5	16	0,1	600	110	7	4,8	5	0,6	9,5
SV 230 K 7	230	300	360	550	10	35	0,25	1750	250	9	4,8	5	0,6	11,5
SV 230 K 10	230	300	360	550	25	78	0,4	3500	400	12	5,4	7,5	0,8	15
SV 230 K 14	230	300	360	550	50	157	0,6	8000	650	16	5,5	7,5	0,8	19
SV 230 K 20	230	300	360	550	100	322	1	12000	1220	22,5	5,9	10	1	26
SV 230 K 23	230	300	360	550	100	407	1	15000	2020	25	5,9	10	1	27

Type SV....K 20 with I_{max} = 1 x 15 kA @ 8/20 µs available upon request

Type SV....K 23 with I_{max} = 1 x 20 kA @ 8/20 µs available upon request

KEKO VARICON products are sold by description only - product technical specification. KEKO VARICON reserves the right to make changes in circuit design and/or specifications at any time without notice. Accordingly the reader is cautioned to verify that data sheets are current before placing orders. Information furnished by KEKO VARICON is believed to be accurate and reliable. However, no responsibility is assumed by KEKO VARICON for its use; nor for any infringements of patents or other rights of third parties which may result from its use.

Device Ratings and Characteristics

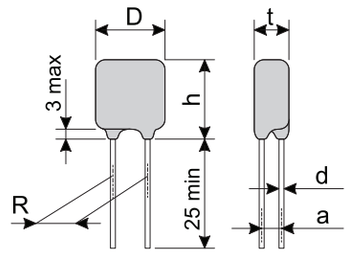

SV 250 K 5.....SV 550 K 23

Type	V_{rms}	V_{dc}	V_n @ 1 mA	V_c	I_c	W_{max} 10/1000 µs	P max	I_{max}* 8/20 µs	C typ. @ 1 kHz	D max	t max	R	d	h max
	V	V	V	V	A	J	W	A	pF	mm	mm	mm	mm	mm
SV 250 K 5	250	320	390	590	5	17	0,1	600	100	7	5,0	5	0,6	9,5
SV 250 K 7	250	320	390	590	10	38	0,25	1750	240	9	5,0	5	0,6	11,5
SV 250 K 10	250	320	390	590	25	85	0,4	3500	370	12	5,6	7,5	0,8	15
SV 250 K 14	250	320	390	590	50	169	0,6	8000	600	16	5,7	7,5	0,8	19
SV 250 K 20	250	320	390	590	100	345	1	12000	1130	22,5	6,1	10	1	26
SV 250 K 23	250	320	390	590	100	437	1	15000	1980	25	6,1	10	1	27
SV 275 K 5	275	350	430	680	5	20	0,1	600	90	7	5,6	5	0,6	9,5
SV 275 K 7	275	350	430	680	10	44	0,25	1750	220	9	5,6	5	0,6	11,5
SV 275 K 10	275	350	430	680	25	97	0,4	3500	350	12	6,0	7,5	0,8	15
SV 275 K 14	275	350	430	680	50	187	0,6	8000	550	16	6,0	7,5	0,8	19
SV 275 K 20	275	350	430	680	100	380	1	12000	1030	22,5	6,3	10	1	26
SV 275 K 23	275	350	430	680	100	481	1	15000	1800	25	6,3	10	1	27
SV 300 K 7	300	385	470	700	10	46	0,25	1750	200	9	5,8	5	0,6	11,5
SV 300 K 10	300	385	470	700	25	102	0,4	3500	320	12	6,1	7,5	0,8	15
SV 300 K 14	300	385	470	700	50	211	0,6	8000	510	16	6,1	7,5	0,8	19
SV 300 K 20	300	385	470	700	100	437	1	12000	940	22,5	6,6	10	1	27
SV 300 K 23	300	385	470	700	100	554	1	15000	1650	25	6,6	10	1	29
SV 320 K 10	320	420	510	760	25	144	0,4	3500	300	12	6,5	7,5	0,8	15
SV 320 K 14	320	420	510	760	50	230	0,6	8000	480	16	6,8	7,5	0,8	19
SV 320 K 20	320	420	510	760	100	485	1	12000	860	22,5	6,8	10	1	27
SV 320 K 23	320	420	510	760	100	611	1	15000	1520	25	6,8	10	1	29
SV 385 K 10	385	505	620	900	25	116	0,4	3500	270	12	6,9	7,5	0,8	15
SV 385 K 14	385	505	620	900	50	241	0,6	8000	410	16	6,9	7,5	0,8	19
SV 385 K 20	385	505	620	900	100	495	1	12000	710	22,5	7,5	10	1	27
SV 385 K 23	385	505	620	900	100	624	1	15000	1250	25	7,5	10	1	29
SV 420 K 10	420	560	680	980	25	121	0,4	3500	240	12	7,3	7,5	0,8	15
SV 420 K 14	420	560	680	980	50	253	0,6	8000	380	16	7,4	7,5	0,8	19
SV 420 K 20	420	560	680	980	100	523	1	12000	680	22,5	7,8	10	1	27
SV 420 K 23	420	560	680	980	100	670	1	15000	1200	25	7,8	10	1	29
SV 460 K 10	460	615	750	1080	25	132	0,4	3500	230	12	7,8	7,5	0,8	15
SV 460 K 14	460	615	750	1080	50	275	0,6	8000	350	16	7,8	7,5	0,8	19
SV 460 K 20	460	615	750	1080	100	572	1	12000	620	22,5	8,2	10	1	27
SV 460 K 23	460	615	750	1080	100	728	1	15000	1080	25	8,2	10	1	29
SV 510 K 10	510	670	820	1200	25	144	0,4	3500	210	12	8,2	7,5	0,8	15
SV 510 K 14	510	670	820	1200	50	284	0,6	8000	330	16	8,2	7,5	0,8	19
SV 510 K 20	510	670	820	1200	100	598	1	12000	570	22,5	8,7	10	1	27
SV 510 K 23	510	670	820	1200	100	750	1	15000	1000	25	8,7	10	1	29
SV 550 K 10	550	745	910	1350	25	168	0,4	3500	200	12	8,8	7,5	0,8	15
SV 550 K 14	550	745	910	1350	50	330	0,6	8000	310	16	8,8	7,5	0,8	19
SV 550 K 20	550	745	910	1350	100	644	1	12000	510	22,5	9,2	10	1	27
SV 550 K 23	550	745	910	1350	100	815	1	15000	900	25	9,2	10	1	29

Type SV....K 20 with I_{max} = 1 x 15 kA @ 8/20 µs available upon request

Type SV....K 23 with I_{max} = 1 x 20 kA @ 8/20 µs available upon request

KEKO VARICON products are sold by description only - product technical specification. KEKO VARICON reserves the right to make changes in circuit design and/or specifications at any time without notice. Accordingly the reader is cautioned to verify that data sheets are current before placing orders. Information furnished by KEKO VARICON is believed to be accurate and reliable. However, no responsibility is assumed by KEKO VARICON for its use; nor for any infringements of patents or other rights of third parties which may result from its use.

Full Custom Parameter Designed Medium Voltage Varistors

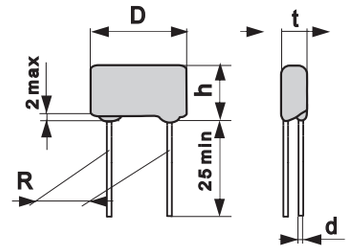

The SV series group of full custom parameter designed varistors consists of square and rectangular shaped varistors, available either as epoxy coated lead style components or as metalized pellets.

The customer can specify the varistor electrical properties and set the limits of size parameters in accordance with the General Technical Data, as provided below. The customer can also choose to have standard electrical parameters in a non-standard varistor shape and size to best fit the available housing. The customer has our full engineering support in realizing his specific protection requirement.

General Technical Data

Electrical Parameters		**Value**	**Units**
Varistor Threshold Voltage (V_n) Range at 1 mA		100 to 910	V
Continuous:			
Steady State Applied Voltage:			
DC Voltage Range (V_{dc})		85 to 745	V
AC Voltage Range (V_{rms})		60 to 550	V
Transient:			
Peak Single Pulse Surge Current, 8/20 µs Waveform (I_{max})		> 5500	A/cm²
Single Pulse Surge Energy, 10/1000 µs Waveform (W_{max})		> 400	J/cm³
Protective Level			
Clamping Voltage		< 1,9 x V_{dc}	V
Coefficient of non-linearity a	minimum	45	
	typical	60	
Leakage Current Level	at 25 °C	0.5	µA/cm²
	at 85 °C	10	µA/cm²
Temperature behavior			
Operating Ambient Temperature		-40 to +85	°C
Storage Temperature Range		-40 to +125	°C
Minimum Threshold Voltage Temperature Coefficient		-0,001	%/°C
Design			
Leaded	- coating	epoxy resin	
	- lead style	straight or crimped	
Pallet		solderable electrode finish	
Size Parameters			
Minimum Size		3 x 3	mm
Maximum Size		23 x 23	mm
Shape		square, rectangular	
Lead Spacing R		2,5, 5,0, 7,5, 10	mm
Wire Diameter d		0,6, 0,8, 1,0	mm
Packaging		bulk, tape and reel	

Ordering Information

SV 250 K 802 B L1 YY

SV	– Series Name
250	– Maximum Continuous Operating Voltage V_{rms}
K	– V_n Tolerance: J = ± 5 %, K= ± 10 %, S = special
802	– Surge Current (8/20 µs) Code: 802 = 8000 A
B	– Package: R = Reel, A = Ammo pack, B = Bulk
L1	– Lead Style: 1 = straight, 5 = crimped, M = met.,...
YY	– Other parameters are either specified separately or are the function of electrical and/or size parameters

Varistor Marking

KEKO
SV 250
K 802

KEKO	– Trade name
SV	– Series Name
250	– V_{rms}
K	– V_n Tolerance
802	– Surge Current Code

KEKO VARICON products are sold by description only - product technical specification. KEKO VARICON reserves the right to make changes in circuit design and/or specifications at any time without notice. Accordingly the reader is cautioned to verify that data sheets are current before placing orders. Information furnished by KEKO VARICON is believed to be accurate and reliable. However, no responsibility is assumed by KEKO VARICON for its use; nor for any infringements of patents or other rights of third parties which may result from its use.

Protection Level

* With the worst-case condition in the tolerance region

Pulse Rating Curves

Model Size 5
SV 60...275

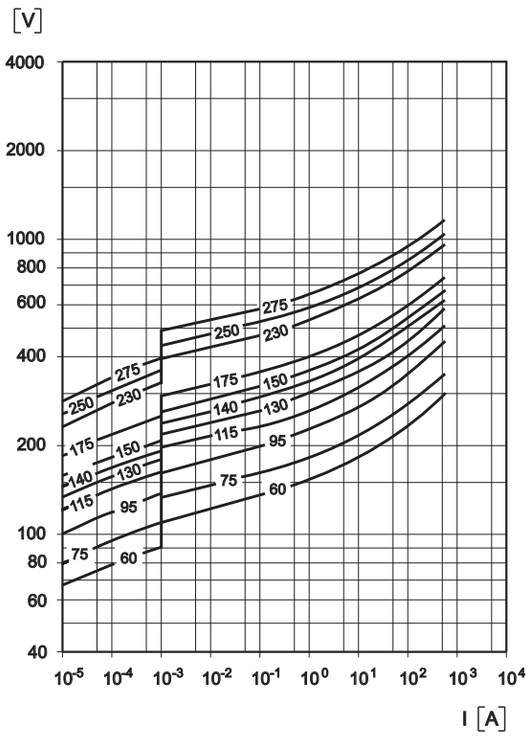

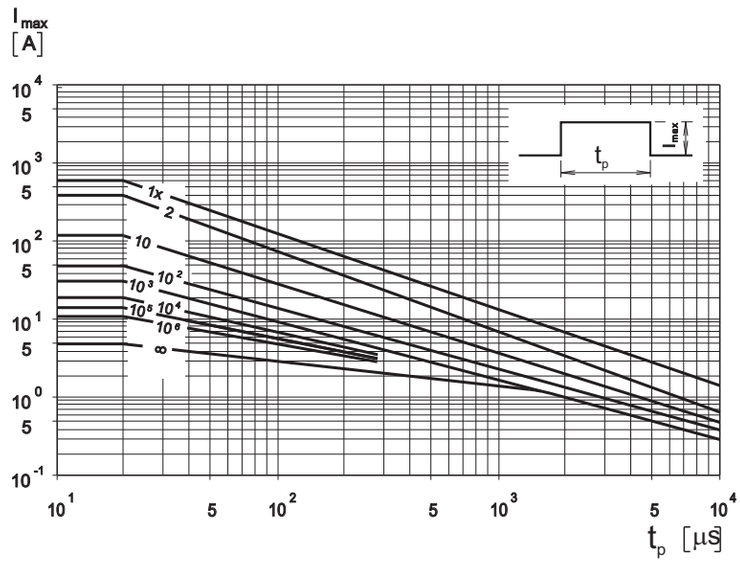

Model Size 7
SV 60...300

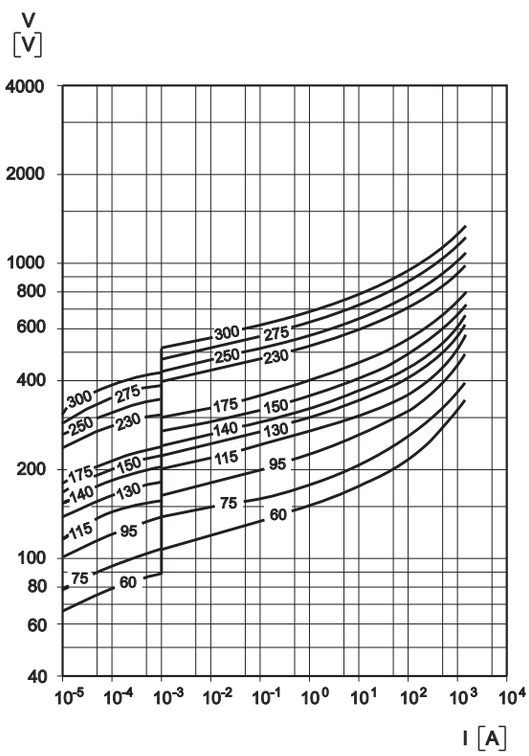

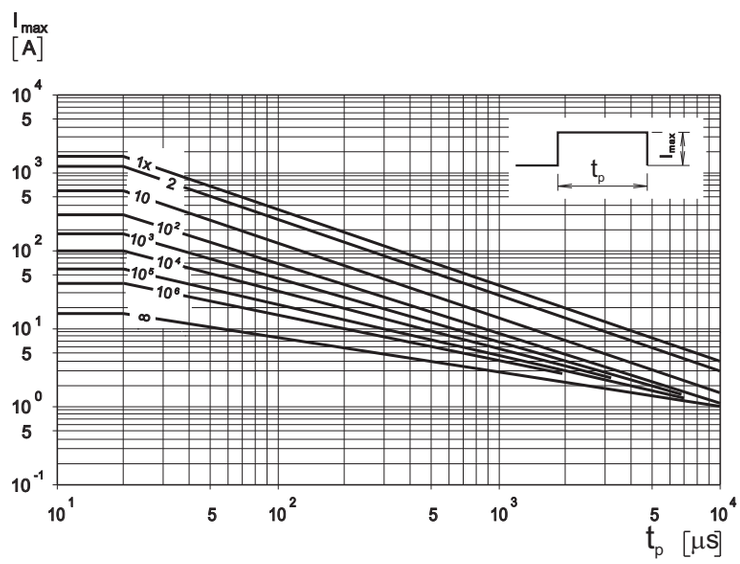

KEKO VARICON products are sold by description only - product technical specification. KEKO VARICON reserves the right to make changes in circuit design and/or specifications at any time without notice. Accordingly the reader is cautioned to verify that data sheets are current before placing orders. Information furnished by KEKO VARICON is believed to be accurate and reliable. However, no responsibility is assumed by KEKO VARICON for its use; nor for any infringements of patents or other rights of third parties which may result from its use.

Protection Level

* With the worst-case condition in the tolerance region

Pulse Rating Curves

Model Size 10
SV 60...550

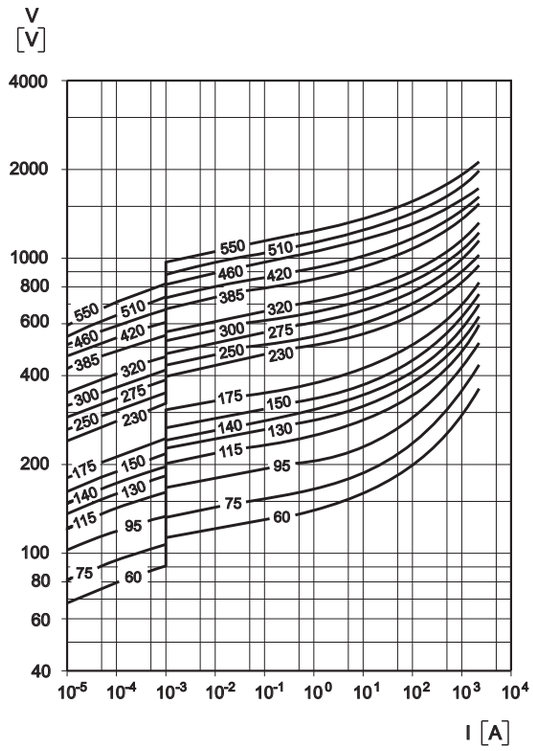

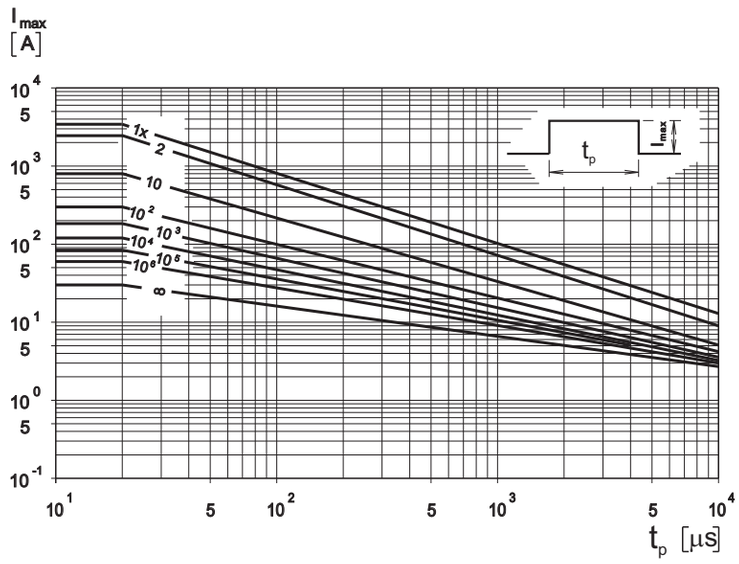

Model Size 14
SV 60...550

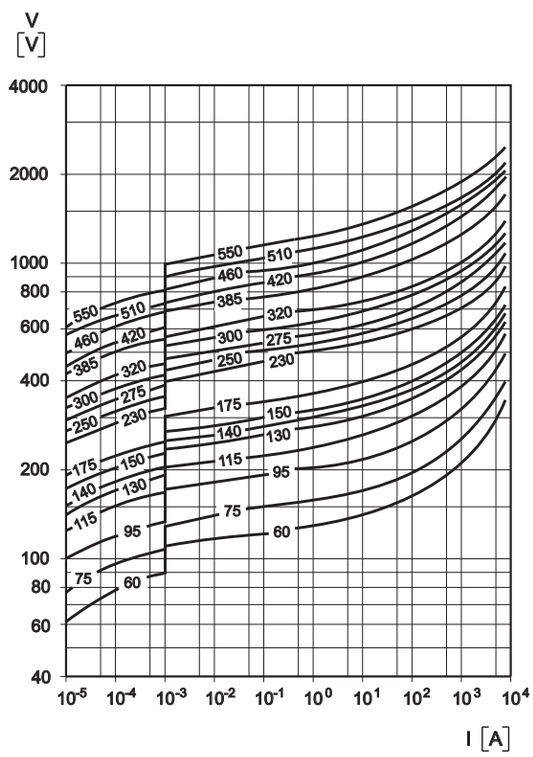

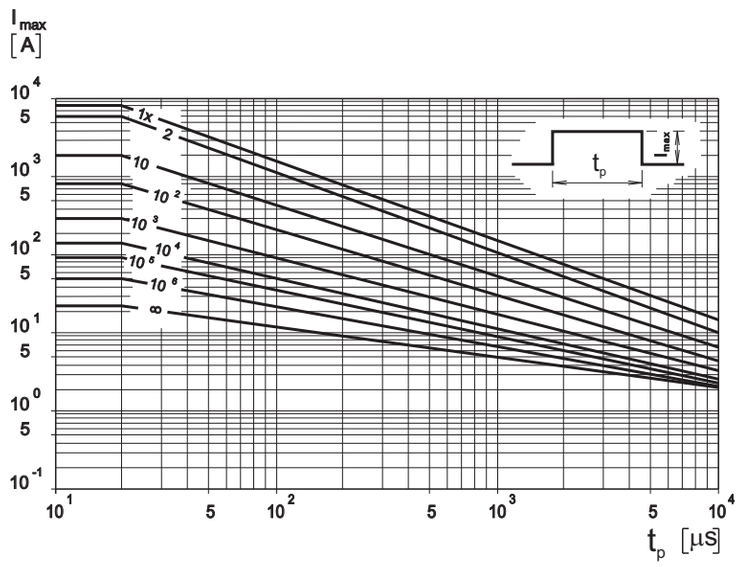

KEKO VARICON products are sold by description only - product technical specification. KEKO VARICON reserves the right to make changes in circuit design and/or specifications at any time without notice. Accordingly the reader is cautioned to verify that data sheets are current before placing orders. Information furnished by KEKO VARICON is believed to be accurate and reliable. However, no responsibility is assumed by KEKO VARICON for its use; nor for any infringements of patents or other rights of third parties which may result from its use.

Protection Level

* With the worst-case condition in the tolerance region

Pulse Rating Curves

Model Size 20
SV 60...550

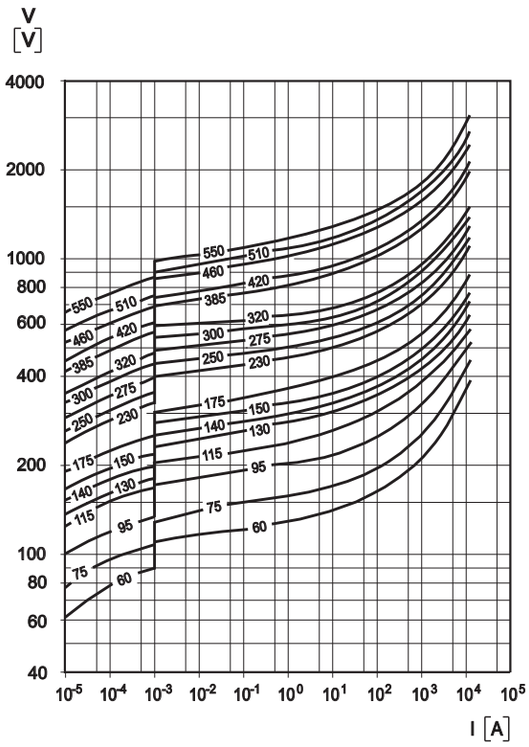

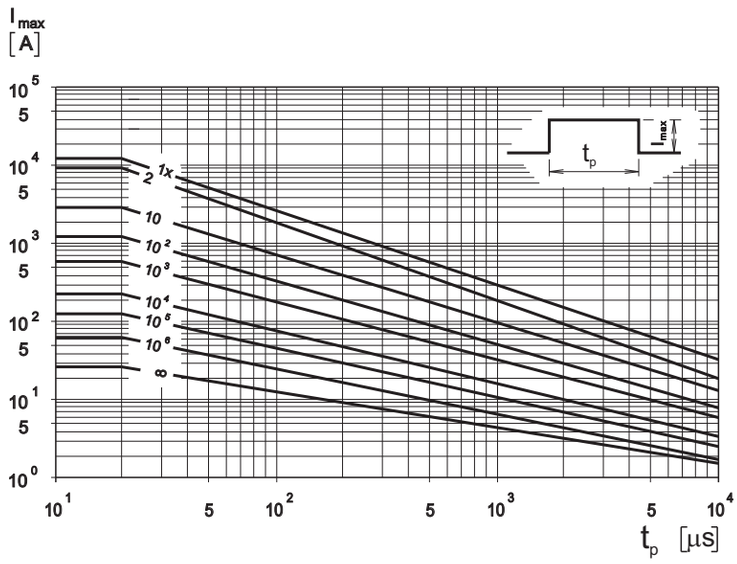

Model Size 23
SV 130...550

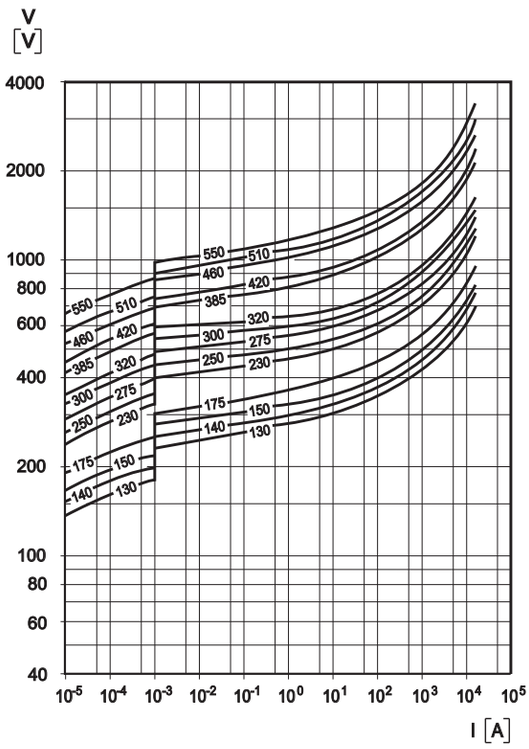

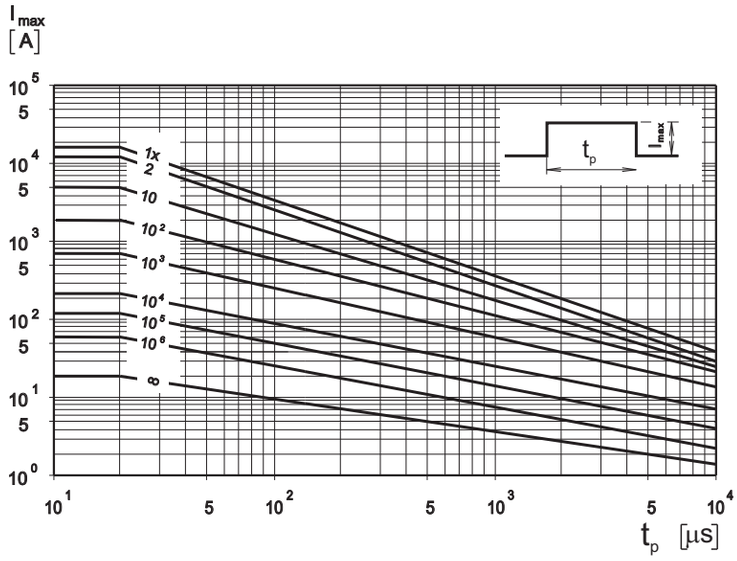

KEKO VARICON products are sold by description only - product technical specification. KEKO VARICON reserves the right to make changes in circuit design and/or specifications at any time without notice. Accordingly the reader is cautioned to verify that data sheets are current before placing orders. Information furnished by KEKO VARICON is believed to be accurate and reliable. However, no responsibility is assumed by KEKO VARICON for its use; nor for any infringements of patents or other rights of third parties which may result from its use.

Lead Styles

Type	R (mm)	h_{max} (mm)	A_{max} (mm)	Version 1	Version 5
ZV 2...40 K 5 ZV 2...40 K 7 ZV 2...40 K 10 AV 14...40 K 602 003	5 5 5 5		7 8 9 7	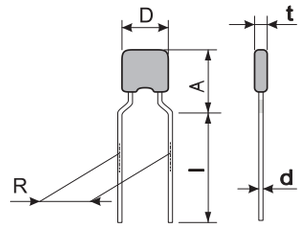	
ZV 4...40 K14 AV 14...40 K 802 006	5 5	9 9	12 9	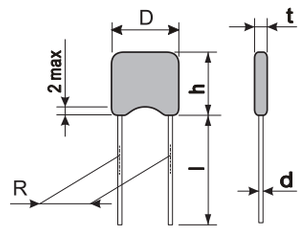	
ZV 4...40 K 20 AV 14...40 K 902 012...025 AV 14...20 K 1103 050	5 5 7,5		12 12 12	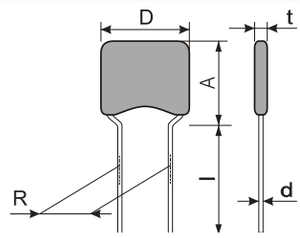	
CV 50...300 K 5 CV 50...300 K 7 CV+ 60...275 K 7	5 5 5	9,5 11,5 11,5	12,5 14,5 14,5	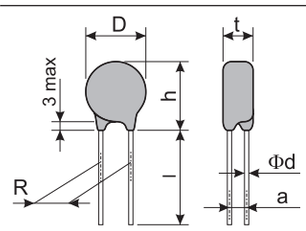	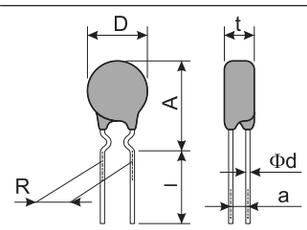
CV 50...680 K 10 CV 50...680 K 14 CV 50...680 K 20 CV+ 60...550 K 10 CV+ 60...550 K 14 CV+ 60...550 K 20 CV+ 130...550 K 23	7,5 7,5 10 7,5 7,5 10 10	15 20 26 15 20 26 27		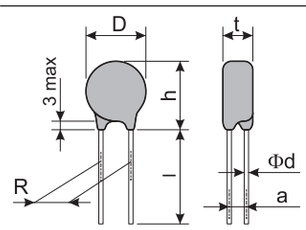	
SV 60...300 K 5 SV 60...300 K 7	5 5	9,5 11,5	12,5 14,5	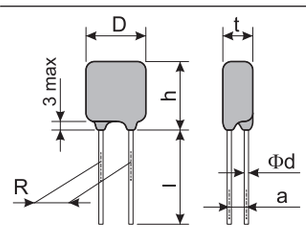	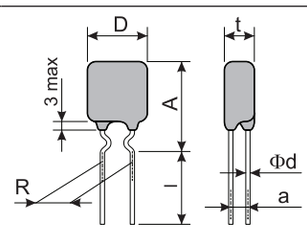
SV 60...550 K 10 SV 60...550 K 14 SV 60...550 K 20 SV 130...550 K 23	7,5 7,5 10 10	15 19 26 27		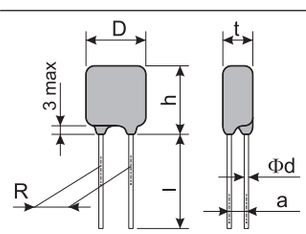	

KEKO VARICON products are sold by description only - product technical specification. KEKO VARICON reserves the right to make changes in circuit design and/or specifications at any time without notice. Accordingly the reader is cautioned to verify that data sheets are current before placing orders. Information furnished by KEKO VARICON is believed to be accurate and reliable. However, no responsibility is assumed by KEKO VARICON for its use; nor for any infringements of patents or other rights of third parties which may result from its use.

Ordering Information

ZV Series

ZV 40 K 20 R L1 YY

ZV - Series Name
40 - Maximum Continuous Working Voltage - V_{rms}
K V_n Tolerance: K = ± 10 %, L = ± 15%, M = ± 20 %
20 - Size: 5, 7, 10, 14, 20
R - Packaging: R = Reel, A = Ammo Pack, B = Bulk
L1 - Lead Style; 1 = straight, 5 = crimped
YY - Special requirements

AV Series

AV 20 K 802 006 R L1 YY

AV - Series Name
20 - Maximum Continuous Working Voltage - V_{rms}
K - V_n Tolerance: K = ± 10 %, S = special
80 - Size: 60, 80, 90, 110; 80 = 8 mm
2 - Leas spacing Code: 2 = 5 mm, 3 = 7,5 mm
006 - WLD - Load Dump Energy Code: 006 = 6 J
R - Packaging: R = Reel, A = Ammo Pack, B = Bulk
L1 - Lead Style; 1 = straight, 5 = crimped
YY - Special requirements

CV / CV+ / SV Series

CV 130 K 14 R L1 YY

CV - Series Name
130 - Maximum Continuous Working Voltage - V_{rms}
K - V_n Tolerance: K = ± 10 %, J = ± 5%, S = special
14 - Size: 5, 7, 10, 14, 20, 23
R - Packaging: R = Reel, A = Ammo Pack, B = Bulk
L1 - Lead Style; 1 = straight, 5 = crimped
YY - Speciaa requirements

Varistor Marking for ZV / AV / CV / CV+ / SV Series

For Model Size 5, 7

14Z5

14 - V_{rms}
Z - the first letter of Series Name ZV
5 - Model Size: 5, 7

For Model Size 602

20A
003

20 - V_{rms}
A - the first letter of Series Name AV
003 - WLD Code: 003

For Model Size 5

CV
130K5

130 - V_{rms}
CV - Series Name
K - V_n Tolerance
5 - Model Size: 5

For Model Size 10, 14

ZV 40
K10

40 - V_{rms}
K - V_n Tolerance
10 - Model Size: 10, 14

For Model Size 802

AV 17
K 006

AV - Series Name
17 - V_{rms}
K - V_n Tolerance
006 - WLD Code: 006

For Model Size 20

KEKO
ZV 11
K20

KEKO - Tradename
ZV - Series Name
11 - V_{rms}
K - V_n Tolerance
20 - Model Size: 20

For Model Size 902,1103

KEKO
AV 30
K 100

KEKO - Tradename
AV - Series Name
30 - V_{rms}
K - V_n Tolerance
100 - WLD Code: 012, 025, 050, 100

For Model Size 7, 10, 14, 20, 23

KEKO
CV 300 K 20
XX

KEKO - Tradename
CV - Series Name: Cv, Cv+, SV
300 - V_{rms}
K - V_n Tolerance
20 - Model Size: 7, 10, 14, 20, 23
xx - Approvals

KEKO VARICON products are sold by description only - product technical specification. KEKO VARICON reserves the right to make changes in circuit design and/or specifications at any time without notice. Accordingly the reader is cautioned to verify that data sheets are current before placing orders. Information furnished by KEKO VARICON is believed to be accurate and reliable. However, no responsibility is assumed by KEKO VARICON for its use; nor for any infringements of patents or other rights of third parties which may result from its use.

Packaging

Reel

V	5				7				10				14				20					23	
	ZV	AV/ 602	SV	CV/ CV+	ZV	AV/ 802	SV	CV/ CV+	ZV	AV/ 902	SV	CV/ CV+	ZV	AV/ 1103	SV	CV/ CV+	ZV	AV 20	AV 40	SV	CV/ CV+	SV	CV/ CV+
2	1500				1500				1500				1500				1500						
4	1500				1500				1500				1500				1500						
6	1500				1500				1500				1500				1500						
8	1500				1500				1500				1500				1500						
11	1500			1800	1500			1500	1500				1500				1500						
14	1500	1500		1800	1500	1500		1500	1500	1500		1300	1500	1300			1500						
17	1500	1500		1800	1500	1500		1500	1500	1300		1300	1500	1300			1500						
20	1500	1500		1500	1500	1500		1500	1500	1300		1300	1500	1300			1500						
25	1500	1300		1500	1500	1300		1500	1500	1300		1300	1500				1500	500	400				
30	1500	1300		1500	1500	1300		1500	1500	1300		1300	1500				1500	500	400				
35	1500	1300		1500	1500	1300		1500	1500	1300		1300	1500				1500	500	400				
40	1500	1300		1500	1500	1300		1500	1500	1300		1300	1500				1500	500	400				
50				1500				1500				1300				700					600		
60			1500	1500			1500	1500			1300	1300			600	700				600	600		
75			1300	1500			1300	1500			1300	1300			600	700				600	600		
95			1300	1500			1300	1000			1200	1300			600	600				500	600		
115			1300	1300			1300	1000			1200	1000			500	600				500	500		
130			1300	1300			1300	1000			1200	1000			500	600				500	500	150	250
140			1300	1200			1300	1000			1200	1000			500	600				500	500	150	250
150			1200	1200			1200	1000			1000	1000			500	600				500	500	150	250
175			1200	1200			1200	1000			1000	1000			500	500				500	500	150	250
230			1000	1000			1000	1000			1000	1000			500	500				500	400	150	150
250			1000	1000			1000	1000			900	800			400	400				400	400	150	150
275			1000	1000			1000	1000			900	800			400	400				400	400	150	150
300				900			900	1000			800	800			400	400				400	400	100	150
320											800	800			400	400				300	400	100	150
385											700	700			300	400				300	300	100	150
420											700	700			300	300				300	300	100	150
460											600	600			300	300				300	300	100	150
510											600	600			300	300				300	300	100	150
550*											600	600			300	300				300	300	100	150

* For voltages to 680 - same as for 550.

Ammo

V	5				7				10				14				20					23	
	ZV	AV/ 602	SV	CV/ CV+	ZV	AV/ 802	SV	CV/ CV+	ZV	AV/ 902	SV	CV/ CV+	ZV	AV/ 1103	SV	CV/ CV+	ZV	AV 20	AV 40	SV	CV/ CV+	SV	CV/ CV+
2	2000				2000				2000				2000				2000						
4	2000				2000				2000				2000				2000						
6	2000				2000				2000				2000				2000						
8	2000				2000				2000				2000				2000						
11	2000			2000	2000			2000	2000				2000				2000						
14	2000	2000		2000	2000	2000		2000	2000	1800		1800	2000	1500			2000						
17	2000	2000		2000	2000	2000		2000	2000	1800		1800	2000	1800			2000						
20	1800	2000		2000	1800	2000		2000	1800	1800		1800	1800	1800			1800						
25	1800	1800		2000	1800	1800		2000	1800	1800		1800	1800				1800	600	400				
30	1800	1800		2000	1800	1800		2000	1800	1800		1500	1800				1800	600	400				
35	1800	1800		2000	1800	1800		2000	1800	1800		1500	1800				1800	600	400				
40	1800	1800		1800	1800	1800		1800	1800	1800		1500	1800				1800	600	400				
50				2000				2000				1800				800					700		
60			1800	2000			1800	2000			1600	1600			800	800				700	700		
75			1800	2000			1800	2000			1600	1600			800	800				700	700		
95			1600	1800			1600	1800			1500	1600			700	700				700	700		
115			1600	1600			1600	1600			1300	1500			700	700				600	600		
130			1600	1600			1600	1600			1300	1300			700	700				600	600	150	250
140			1600	1600			1600	1600			1300	1300			700	700				600	600	150	250
150			1500	1500			1500	1500			1300	1300			700	700				600	600	150	250
175			1500	1500			1500	1500			1300	1300			600	600				600	600	150	250
230			1200	1200			1200	1200			1200	1200			600	600				500	500	150	150
250			1200	1200			1200	1200			1000	1000			500	500				500	500	150	150
275			1200	1200			1200	1200			1000	1000			500	500				500	500	150	150
300				1000			1000	1000			1000	1000			500	500				500	500	100	150
320											1000	1000			500	500				400	400	100	150
385											900	900			400	400				400	400	100	150
420											900	800			400	400				400	400	100	150
460											800	800			400	400				400	400	100	150
510											800	800			400	400				300	400	100	150
550*											700	700			300	400				300	400	100	150

* For voltages to 680 - same as for 550.

KEKO VARICON products are sold by description only - product technical specification. KEKO VARICON reserves the right to make changes in circuit design and/or specifications at any time without notice. Accordingly the reader is cautioned to verify that data sheets are current before placing orders. Information furnished by KEKO VARICON is believed to be accurate and reliable. However, no responsibility is assumed by KEKO VARICON for its use; nor for any infringements of patents or other rights of third parties which may result from its use.

Packaging

Reel

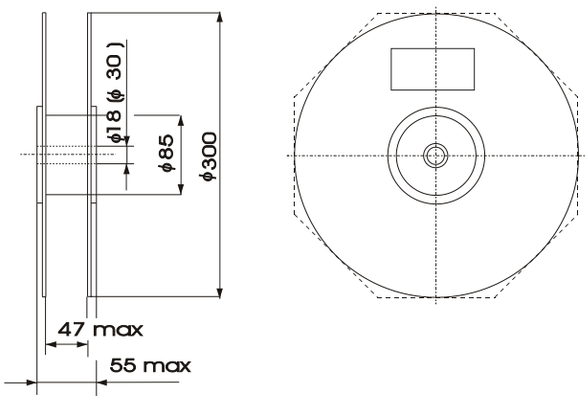

Ammo pack

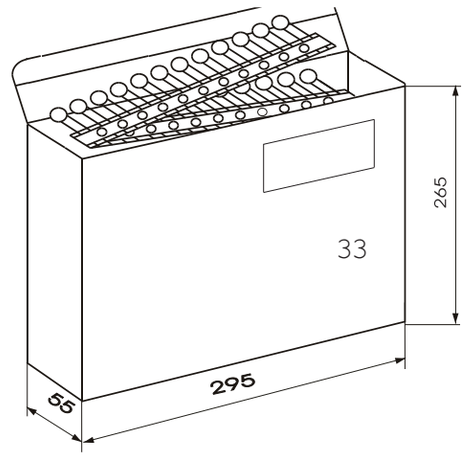

Package units

Bulk

V	5				7				10				14				20					23	
	ZV	AV/ 602	SV	CV/ CV+	ZV	AV/ 802	SV	CV/ CV+	ZV	AV/ 902	SV	CV/ CV+	ZV	AV/ 1103	SV	CV/ CV+	ZV	AV 20	AV 40	SV	CV/ CV+	SV	CV/ CV+
2	1500				1500				1500				1000				1000						
4	1500				1500				1500				1000				1000						
6	1500				1500				1500				1000				1000						
8	1500				1500				1500				1000				1000						
11	1500			1500	1500			1500	1500				1000				1000						
14	1500	1500		1500	1500	1500		1500	1500	1000		600	1000	800			1000						
17	1500	1500		1500	1500	1500		1500	1500	1000		600	1000	800			1000						
20	1500	1500		1500	1500	1500		1500	1500	1000		600	1000	800			1000						
25	1500	1500		1500	1500	1500		1500	1500	1000		600	1000				1000	300	300				
30	1500	1500		1500	1500	1500		1500	1500	1000		600	1000				1000	300	300				
35	1500	1500		1500	1500	1500		1500	1500	1000		600	1000				1000	300	300				
40	1500	1500		1500	1500	1500		1500	1500	1000		600	1000				1000	300	300				
50				1500				1500				600				400					300		
60			1300	1500			1000	1500			500	600			400	400				250	300		
75			1300	1500			1000	1500			500	600			400	400				250	300		
95			1300	1500			900	1000			500	600			400	400				250	300		
115			1300	1500			900	1000			400	500			400	400				250	300		
130			1300	1500			900	1000			400	500			400	400				250	300	150	250
140			1300	1500			900	1000			400	500			400	400				250	300	150	250
150			1300	1500			900	1000			400	500			400	400				250	300	150	250
175			1300	1500			900	1000			400	500			400	400				250	300	150	250
230			900	1000			900	1000			400	500			250	300				250	200	150	150
250			900	1000			900	1000			400	500			250	300				250	200	150	150
275			900	1000			900	1000			400	500			250	300				250	200	150	150
300				1000			900	1000			400	500			250	300				150	200	100	150
320											400	500			250	300				150	200	100	150
385											300	400			250	300				150	200	100	150
420											300	400			250	300				150	200	100	150
460											300	400			250	300				150	200	100	150
510											300	400			250	300				150	200	100	150
550*											300	400			250	300				150	200	100	150

KEKO VARICON products are sold by description only - product technical specification. KEKO VARICON reserves the right to make changes in circuit design and/or specifications at any time without notice. Accordingly the reader is cautioned to verify that data sheets are current before placing orders. Information furnished by KEKO VARICON is believed to be accurate and reliable. However, no responsibility is assumed by KEKO VARICON for its use; nor for any infringements of patents or other rights of third parties which may result from its use.

Protection Level

Customs to IES Publication 286-2 Ed.3: 2008-03

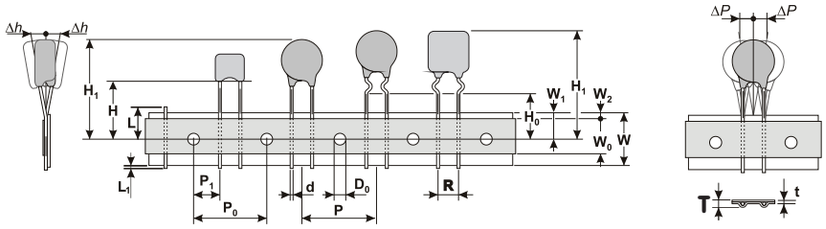

R = 5 mm

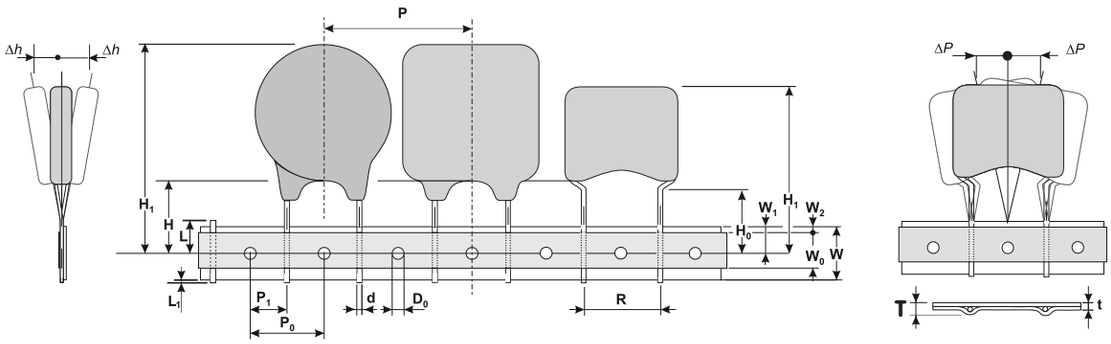

R = 7,5 mm, 10 mm

Symbol	Parameter	Model Size				
		Φ 5	Φ 7	Φ 10	Φ 14	Φ 20
		602 / 802 / 902		1103		
		Dimension (mm)				
W	Carrier tape with	18 +1,0/-0,5	18 +1,0/-0,5	18 +1,0/-0,5	18 +1,0/-0,5	18 +1,0/-0,5
Wo	Hold down tape width	5 min	5 min	5 min	5 min	5 min
W1	Sprocket hole position	9 +0,75/-0,5	9 +0,75/-0,5	9 +0,75/-0,5	9 +0,75/-0,5	9 +0,75/-0,5
W2	Distance between the upper edges of the carrier tape and hold-down tape	3 max	3 max	3 max	3 max	3 max
T	Total tape thickness	1,5 max	1,5 max	1,7 max	1,7 max	1,9 max
t	Tape thickness	0,9 max	0,9 max	0,9 max	0,9 max	0,9 max
P	Pitch of component	12,7 ± 1,0	12,7 ± 1,0	12,7 ± 1,0	25,4 ± 1,0	25,4 ± 1,0
Po	Feed hole pitch	12,7 ± 0,3	12,7 ± 0,3	12,7 ± 0,3	12,7 ± 0,3	12,7 ± 0,3
P1	Feed hole center to pitch	3,85 ± 0,7	3,85 ± 0,7	8,95 ± 0,7	8,95 ± 0,7	7,7 ± 0,7
R	Lead Spacing	5 +0,5/-0,2	5 +0,5/-0,2	7,5 +0,5/-0,2	7,5 +0,5/-0,2	10 +0,5/-0,2
ΔP	Component alignment	± 1,3 max	± 1,3 max	± 1,3 max	± 1,3 max	± 1,3 max
Δh	Component alignment	± 2 max	± 2 max	± 2 max	± 2 max	± 2 max
d	Wire diameter	0,6 max	0,6 max	0,8 max	0,8 max	1 max
Do	Feed hole diameter	4 ± 0,2	4 ± 0,2	4 ± 0,2	4 ± 0,2	4 ± 0,2
H	Height from tape center to comp. base	18 +2,0/-0,0	18 +2,0/-0,0	18 +2,0/-0,0	18 +2,0/-0,0	18 +2,0/-0,0
Ho	Seating plane height	16 ± 0,5	16 ± 0,5	16 ± 0,5	16 ± 0,5	16 ± 0,5
H1	Component height	32,2 max	32,2 max	46,5 max	46,5 max	46,5 max
L	Protrusion - cut out	11 max	11 max	11 max	11 max	11 max
L1	Protrusion - cut off	0,5 max	0,5 max	0,5 max	0,5 max	0,5 max

KEKO VARICON products are sold by description only - product technical specification. KEKO VARICON reserves the right to make changes in circuit design and/or specifications at any time without notice. Accordingly the reader is cautioned to verify that data sheets are current before placing orders. Information furnished by KEKO VARICON is believed to be accurate and reliable. However, no responsibility is assumed by KEKO VARICON for its use; nor for any infringements of patents or other rights of third parties which may result from its use.

ASSEMBLY RECOMMENDATIONS FOR TH COMPONENTS

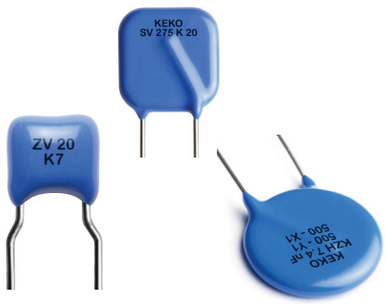

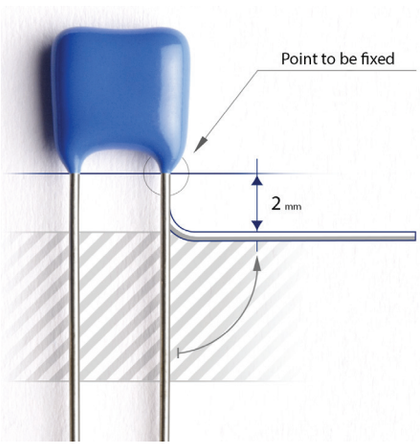

Very often before soldering through-hole components, their leads get bent. It is important not to damage the component during lead bending. Typical damage incurred during bending is cracks in epoxy parts, which can lead to increased humidity sensitivity of a component and consequentially to a shorter life time.

In order to avoid epoxy parts damage it is necessary to:

- fix the most sensitive point (epoxy parts) of a component body

- bend the wire at least 2 mm below the end of epoxy parts

Other potential damage to a component which can lead to component failure or a shorter life time is thermal shock during manual soldering with a soldering iron. This can occur in the case when a soldering iron is placed too close to one point of the component body and most often it happens if the solder joint is too close to the varistor body.

° Resistance to Soldering Heat

In the case of automatic wave soldering, it is important to provide sufficient resistance to soldering heat. In order to prevent any potential problems KEKO VARICON decided to introduce their own internal standard for testing the resistance to soldering heat of through-hole components: 300 °C, 10s.

° Pb-free Wave Soldering Profile Recommendations

Recommended soldering profiles for all above components are in accordance with JEDEC standard curves (J-STD-020D) and therefore compatible with the new Pb-free process.

° lead-fee Wave Soldering Profile

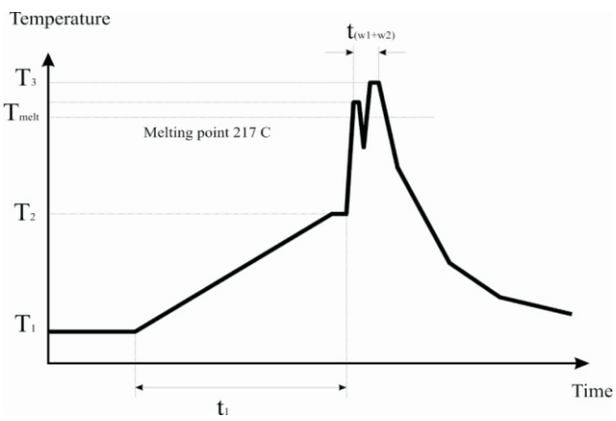

Pb-free wave soldering profile requirements for soldering heat resistance of components

Parameters	Symbol	Specification
preheating temparture gradient		4°C/s max.
Preheating time	t1	2 to 5 min
Min. preheating temperature	T1	130 °C
Max. preheating temperature	T2	180 °C
Melting temperature/point	T_{meltv}	217 °C
Time in wave soldering phase (w_1+w_2)	t_{w1+w2}	10s
Max. wave temperature (w_1+w_2)	T_3	265 °C +0/-5 °C
Cooling tempeature gradient		6° C/s max.
Tempearature jump form T_2 to T_3 (w_1)	$T_{3(w1)}$ - T_2	120 °C max
Time from 25°C to T_3 (wave temperature)		8 min max.

KEKO VARICON products are sold by description only - product technical specification. KEKO VARICON reserves the right to make changes in circuit design and/or specifications at any time without notice. Accordingly the reader is cautioned to verify that data sheets are current before placing orders. Information furnished by KEKO VARICON is believed to be accurate and reliable. However, no responsibility is assumed by KEKO VARICON for its use; nor for any infringements of patents or other rights of third parties which may result from its use.

Terminology

Term	Symbol	Definition
Rated AC Voltage	V_{rms}	Maximum continuous sinusoidal AC voltage (<5% total harmonic distortion) which may be applied to the component under continuous operation conditions at 25 °C
Rated DC Voltage	V_{dc}	Maximum continuous DC voltage (<5% ripple) which may be applied to the component under continuous operating conditions at 25 °C
Supply Voltage	V	The voltage by which the system is designated and to which certain operating characteristics of the system are referred; V_{rms} = 1,1 x V
Leakage Current	I_{dc}	The current passing through the varistor at V_{dc} and at 25 °C or at any other specified temperature
Varistor Voltage	V_n	Voltage across the varistor measured at a given reference current In
Reference Current	I_n	Reference current = 1 mA DC
Clamping Voltage Protection Level	V_c	The peak voltage developed across the varistor under standard atmospheric conditions, when passing an 8/20 µs class current pulse
Class Current	I_c	A peak value of current which is 1/10 of the maximum peak current for 100 pulses at two per minute for the 8/20 µs pulse
Voltage Clamping Ratio	V_c/V_{app}	A figure of merit measure of the varistor clamping effectiveness as defined by the symbols V_c/ Vapp, where (V_{app} = V_{rms} or V_{dc})
Jump Start Transient	V_{jump}	The jump start transient results from the temporary application of an overvoltage in excess of the rated battery voltage. The circuit power supply may be subjected to a temporary overvoltage condition due to the voltage regulation failing or it may be deliberately generated when it becomes necessary to boost start the car.
Rated Single Pulse Transient Energy	W_{max}	Energy which may be dissipated for a single 10/1000 µs pulse of a miaximum rated current, with rated AC voltage or rated DC voltage also applied, without causing device failure
Load Dump Transient	WLD	Load Dump is a transient which occurs in automotive environment. It is an exponentially decaying positive voltage which occurs in the event of a battery disconect while the alternator is still generating charging current with other loads remaining on the alternator circuit at the time of battery disconect.
Rated Peak Single Pulse Transient Current	I_{max}	Maximum peak current which may be applied for a single 8/20 µs pulse, with, rated line voltage also applies, without causing device failure
Rated Transient Average Power Dissipation	P	Maximum average power which may be dissipated due to a group of pulses occurring within a specified isolated time period, without causing device failure at 25 °C
Capacitance	C	Capacitance between two terminals of the varistor measured at @ 1 kHz
Non-linearity Exponent	α	A measure of varistor nonlinearity between two given operating currents, I_n and I_1, as described by I = k V exp(a), where: - k is a device constant, - I_1 < I < i_n and - a 0 log (I_1/I_n)/log(V_1/V_n) = 1/log(V1/V_n), where: - I_n is reference current (1 mA) and V_n is varistor voltage - I_1 = 10 In, V_1 is the voltage measured at I_1
Response Time	tr	The time lag between application of a surge and varistor's "turn-on" conduction action
Varistor Voltage Temperature Coefficient	TC	(V_n at 85 °C - V_n at 25 °C) / (V_n at 25 °C) x 60 °C) x 100
Insulation Resistance	IR	Minimum resistance between shorted terminals and varistor surface
Isolation Voltage		The maximum peak voltage which may be applied under continuous operating conditions between the varistro terminations and any conducting mounting surface
Operating Temperature		the range of ambient temperature for which the varistor is designed to operate continuously as defined by the temperature limits of its climatic category
Climatic Category	LCT/UCT/ DHD	UCT = Upper Category Temperature - the maximum ambient temperature for which a varistor has been designed to operate continuously, LCT = Lower Category Temperature - the minimum ambient temperature at which a varistor has been designed to operate continuously DHD = Dump Heat Test Duration
Storage Temperature		Storage temperature range without voltage applied
Current/Energy Derating		Derating of maximum values when operated above UCT (85 °C for PV and 125 °C for DV)

KEKO VARICON products are sold by description only - product technical specification. KEKO VARICON reserves the right to make changes in circuit design and/or specifications at any time without notice. Accordingly the reader is cautioned to verify that data sheets are current before placing orders. Information furnished by KEKO VARICON is believed to be accurate and reliable. However, no responsibility is assumed by KEKO VARICON for its use; nor for any infringements of patents or other rights of third parties which may result from its use.

KEKOVARICON

Grajski trg 15, SI-8360 Zuzemberk, SLOVENIA
Phone: + 386 7 3885 178
Fax: + 386 7 3885 166
E-mail: info@keko-varicon.si
All rights reserved/Copyright © 2015 KEKO VARICON d.o.o.

www.keko-varicon.si